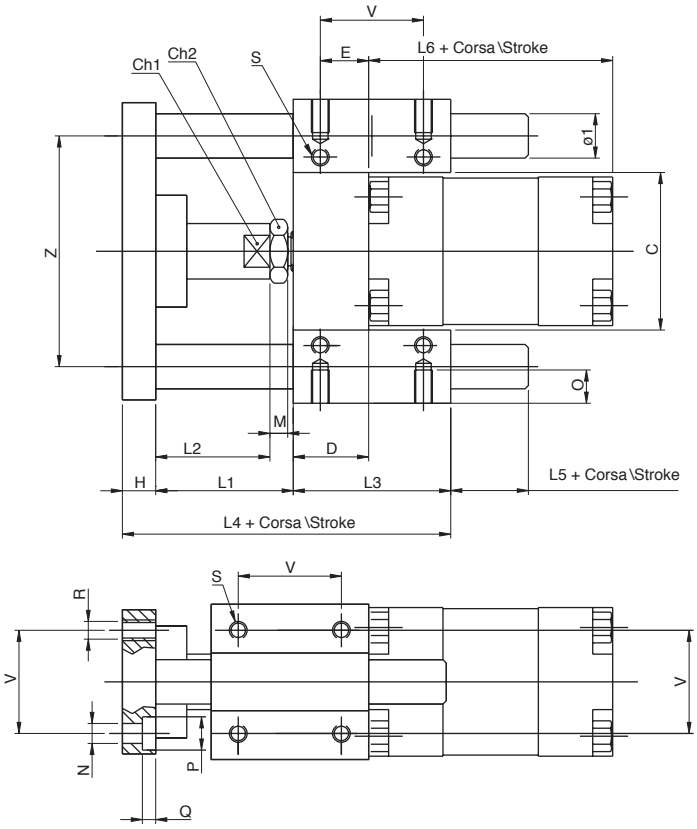

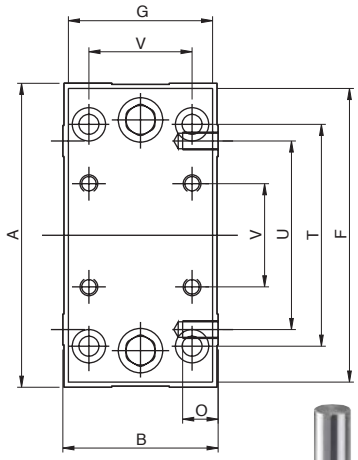

Ø mm.	A	B	C	Ch1	Ch2	D	E	F	G	H	Ø1	L1	L2	L3	L4	L5	L6	M	N	O
32	97	49	51	15	17	17	9.25	93	45	12	12	42	25	48	102	18	97	6	6.6	12
40	115	58	58.5	15	19	21	11	112	55	12	16	43	25	58	113	17	109	7	6.6	12
50	137	70	70.2	20	24	25	18.8	134	65	15	20	49	29	59	123	20	110	8	9	16
63	152	85	85.2	20	24	25	15.3	147	80	15	20	49	29	76	140	21	125	8	9	16

Ø mm.	P	Q	R	S	T	U	V	Z
32	11	6.5	M6	M6	78	61	32.5	74
40	11	6.5	M6	M6	84	69	38	87
50	15	8.5	M8	M8	100	85	46.5	104
63	15	9	M8	M8	105	100	56.5	119

VLCUB

ISO6431

UNITA' DI GUIDA AD "U" CON BUSSOLE IN BRONZO

GUIDE UNIT "U" WITH SELF LUBRICATING SINTERED BRONZE

CORSE STANDARD mm. - *STD STROKES*

Ø mm.	50	100	160	200	250	320	400	500
32	X	X	X	X	X	X	X	X
40	X	X	X	X	X	X	X	X
50	X	X	X	X	X	X	X	X
63	X	X	X	X	X	X	X	X